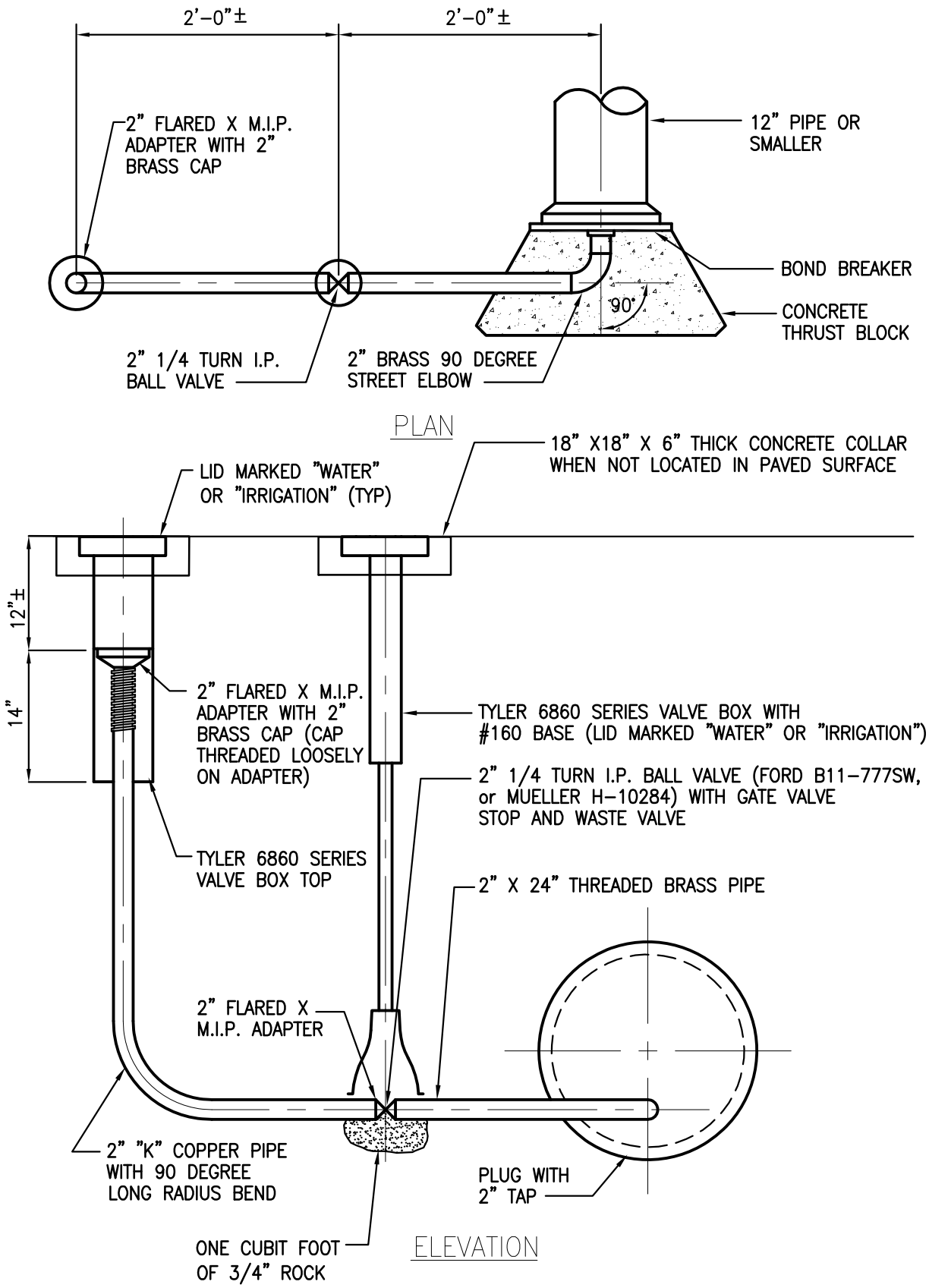

ARAPAHOE COUNTY
Water and Wastewater Authority
13031 E Caley Ave, Centennial, Colorado 80111
Ph: (303) 790-4830 Fax: (303) 790-1718
© Copyright 2007 All Rights Reserved

TEMPORARY BLOW-OFF INSTALLATION

REVISION DATE: 03/01/2013
FIGURE NO. W-11
SHEET NO. 1 of 1