NOTES:

1. D.I.P. MUST BE "FULLY" RESTRAINED WITH MECHANICAL JOINT RESTRAINT SUCH AS MEGALUGS, OR APPROVED EQUAL FROM MAIN TO F.H.
2. INTERIOR F.H. ROD TO BE ONE PIECE.
3. HYDRANT SHALL BE PLUMB IN ALL DIRECTIONS WITH PUMPER NOZZLE FACING STREET AND SHALL BE PAINTED YELLOW.
4. MUELLER A-473 OR WATEROUS WB-67 OR M&H HYDRANT.
5. FIRE HYDRANT TO BE LOCATED 2'-0" BACK OF CURB OR 2'-0" BACK OF SIDEWALK.

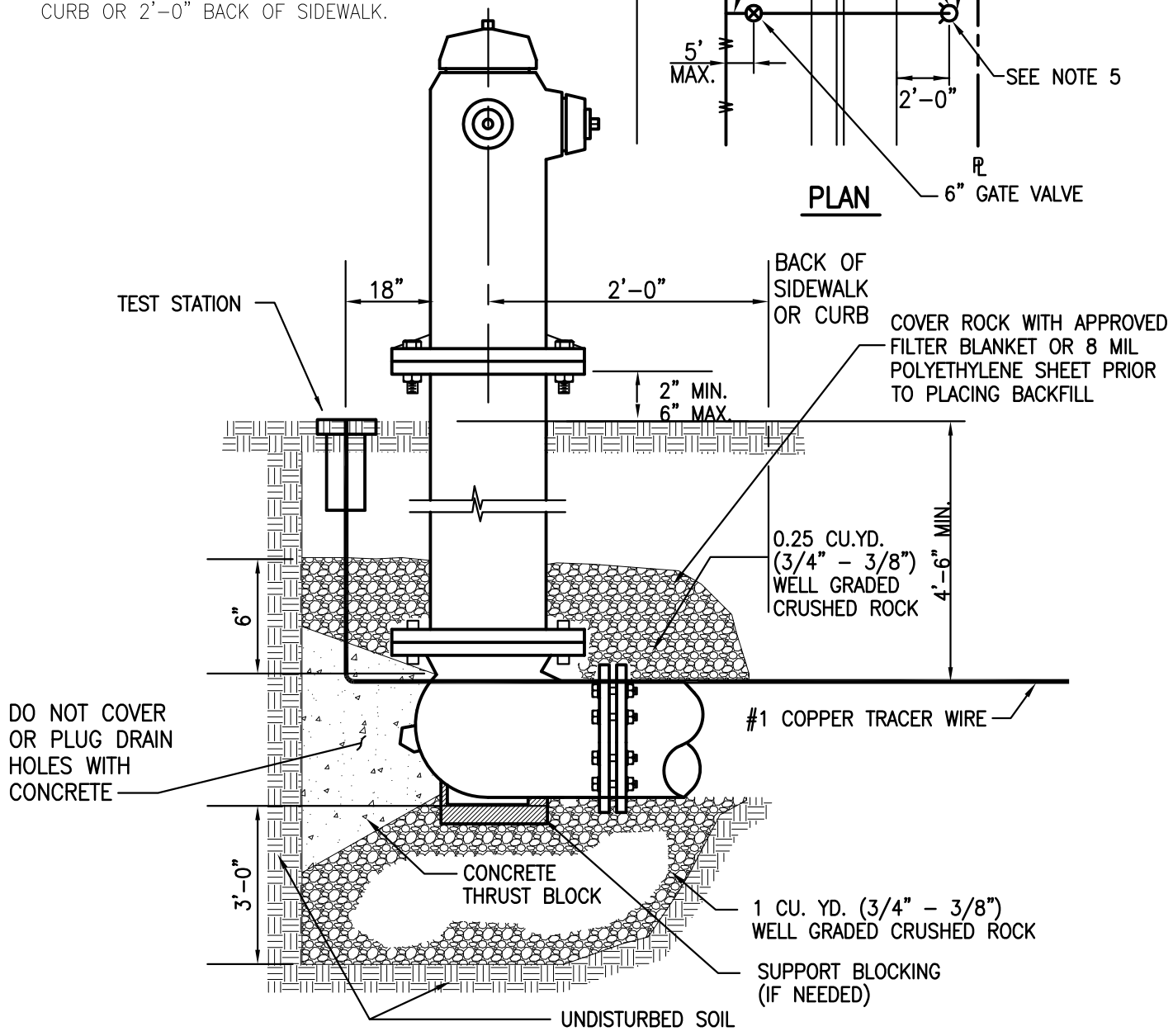

ARAPAHOE COUNTY
Water and Wastewater Authority
13031 E Caley Ave, Centennial, Colorado 80111
Ph: (303) 790-4830 Fax: (303) 790-1718
© Copyright 2007 All Rights Reserved

FIRE HYDRANT

REVISION DATE: 03/01/2013
FIGURE NO. W-9
SHEET NO. 1 of 1